® Badger Meter Europa GmbH

MN 4 Series

Oval gear flow meter

INSTRUCTION AND OPERATION MANUAL

March 2013

OG_MN4_BA_02_1303

1. Basic safety recommendations 1

2. Repairs 1

3. To the owner 2

4. Operation 2

5. For the use in ex-zones 2

6. Model MN4 3

6.1 General information 3
6.2 Installation 3
6.3 Operation 4
6.4 Service instructions 4
6.5 Meter parts listing 6
6.6 Dimensions 7
6.7 Specifications 7
6.8 Troubleshooting 8

7. Modell MN4 with pulse transmitter / standard LCD / deluxe LCD 9

7.1 General information 9
7.2 Installation 9
7.3 Operation 10
7.4 Electrical connections 10
7.5 Service instructions 11
7.6 Standard LC Display 12
7.7 Deluxe LC Display 14
7.8 Specifications 14
7.9 Meter parts listing 15
7.10 Display parts listing 16
7.11 Dimensions 17
7.12 Troubleshooting 18

8. Analog register for models with and without encoder 19

8.1 Service instructions 19
8.2 Register parts listing 20
8.3 Counter parts listing 22
8.4 Encoder wiring 23

9. Warranty 25

10. Return of goods for repair / harmlessness declaration 26

1. Basic safety recommendations

The manufacturer is not liable for damages that result from improper or not in accordance with the requirements use.
The meters are constructed according to state-of-the-art technology and tested operationally reliable. They have left the factory in a faultless condition concerning safety regulations.
The mounting, electric installation, taking into operation and maintenance of the meter may only be carried out by suitable technicians. Furthermore the operating personnel has to be trained by the operating authority and the instructions of this manual have to be followed.
Basically, you have to respect the regulations for the opening and repairing of electrical equipment valid in your country.

2. Repairs

If you should send back a flow meter in operation, please take notice of the following points:

- Please enclose a description of the error as well as a precise statement of the measured medium (if necessary a safety specification sheet).
- The meter has to be in a cleaned condition (outside and inside). Especially with harmful measuring mediums you have to pay attention that there are no impurities nor residues in the pipe or at the connections.
- If it is not possible to clean the meter completely, particularly with harmful materials, do not send back the meter.
- Please copy and fill in the harmless declaration at the end of this manual and send it back together with the meter to be repaired.

We reserve the right to repair only cleaned meters. Costs, which result from insufficient cleaning, will be charged to you.

3. To the owner

Thank you for purchasing a MN series flow meter. Please take a few minutes to read through this manual before installing and operating your meter. If you have any problems with the meter, refer to the maintenance and trouble shooting sections of this manual.

This manual contains connection and operating instructions for the MN4 series meters. If you need further assistance, contact us or your local representative for advice. The MN series flow meter has incorporated the oval rotor principle into its design. This has proven to be a reliable and highly accurate method of measuring flow. Exceptional repeatability and high accuracy over a wide range of fluid viscosities and flow rates are features of the MN series flow meter design. The low pressure drop and high pressure rating means the MN series flow meter is suitable for both gravity and pump (in-line) applications.

4. Operation

Please read this information carefully before use!

Before use, confirm the fluid to be used is compatible with the meter, or consult your local representative for advice. This meter will handle particle sizes up to 0.075 mm/0.0003”. To prevent damage from dirt or foreign matter, we recommend a Y or basket type 200 mesh strainer be installed as close as possible to the inlet side of the meter. To prevent damage to the meter slowly fill the system with fluid (this will prevent damage caused by air purge). Note: Failure to do this could damage the meter. For pump applications, turn off the pump at the end of each day.

5. For the use in ex-zones

- Reed switch: Connection to intrinsically safe electric circuit (simple electrical equipments must be operated intrinsically safe with a suitable barrier according to EN 50020).
- Equipotential bonding has to be ensured upon the pipe system.
- Meters with plastic housing (PPS): Please do not clean the meters with a dry cloth as this would cause electrostatic charge.
- The fluid conductivity must be better than 1000 pico/ Siemens/meter to avoid electrostatic charges.
- Ambient temperature must be between - 20°C and + 40°C (T4).
- If electronical register is mounted on the meter or operated with the meter, the electronical register must have a current ATEX approval and must be operated intrinsically safe with a suitable barrier according to EN 50020.

6. Model MN4

6.1 General information

The MN4 series flow meters are available in either aluminium or 316 stainless steel. Standard rotors are made from PPS.

The MN4 series mechanical displays have a resettable batch totaliser and non-resettable accumulative totaliser.

6.2 Installation

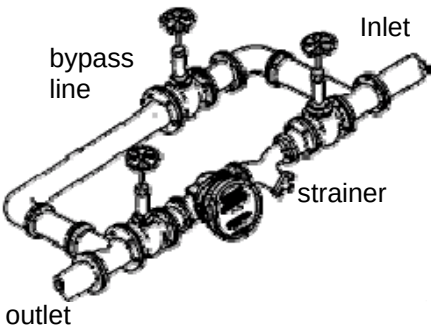

1. We recommend that when setting up pipework for meter installations a bypass line be included in the design. This provides the facility for a meter to be removed for maintenance without interrupting production (see right fig.).
2. Use thread sealant on all pipe threads.
3. For pump applications ensure pipe work has the appropriate working pressure rating to match the pressure output of the pump. The maximum working pressures are 1/2” aluminium or stainless steel series 3450 kPa / 34.5 bar / 500 PSI.
4. Install a wire mesh strainer (Y or basket type 60 mesh) as close as possible to the inlet side of the meter.
5. Ensure that the meter is installed so that the flow of the liquid is in the direction of the arrows embossed on the meter body.
6. The meter can be installed in any orientation as long as the meter shafts are in a horizontal plane (refer to figure on the right for correct installation). The register assembly may be orientated to suit the individual installation.

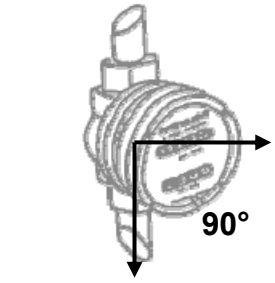

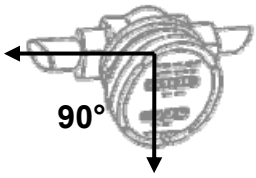

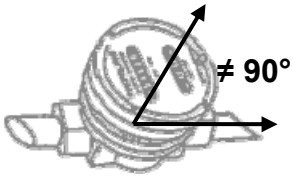

Note: Incorrect installation can cause premature wear of meter components.

7. Do not overtighten meter connections.
8. It is important that after initial installation you **fill** the **line slowly**, **high speed air purge** could **cause damage** to the rotors.
9. Test the system for leaks.
10. Check the strainer for swarf or foreign material, after the first 200 litres check periodically, particularly if the flow rate decreases.

6.3 Operation

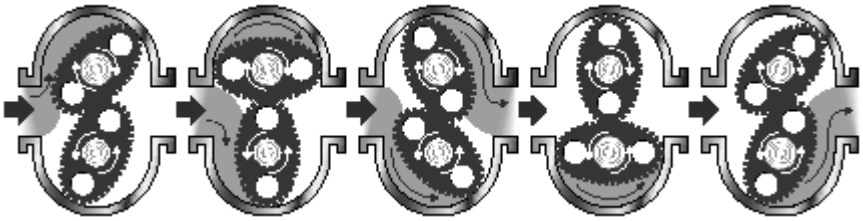

When fluid passes through the meter, rotors turn. The gear located on top of one of the rotors drives the mechanical registers gear train which provides an accurate readout.

6.4 Service instructions

Disassembly:
Ensure that the fluid supply to the meter is disconnected and the line pressure is released before disassembly. Refer to the exploded parts diagram for item numbers.

1. Remove the four screws (item 17) located on the face of the register. Then remove the face plate cover including register assembly.
2. Remove the four register mounting screws (item 15). Then remove the lower half of the register housing.
3. Remove the six cover plate screws (item 12) and remove the cover plate (item 11).
4. Remove the four meter cap screws (item 5) and remove the meter cap (item 4).
5. Remove rotors (Item 3).

Reassembly:

1. Clean all components before reassembly.
2. Before reassembly check the condition of the rotors (item 3). Replace if necessary.
3. Replace the rotor (with the gear) on the short shaft in the housing then place the 2nd rotor onto the shaft so as the rotors are at 90° to each other (refer fig 3). Check rotor operation by turning either of the rotors. If the rotors are not in mesh correctly or do not move freely, remove one of the rotors and replace it correctly at 90° to the other rotor. Recheck the operation of the rotors.

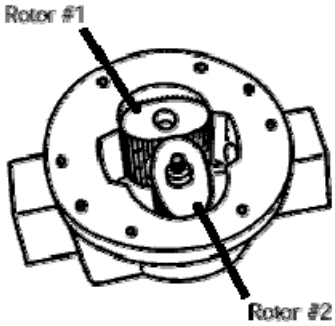

Rotors must be at 90° to each other.

5

4. Inspect the gears (item 6) in the meter cap (item 4) for wear (replace if required, refer to spare parts).
5. Replace the o-ring (item 2) into the groove in the meter cap, if the o-ring has been distorted or is damaged in any way replace it with a new part.
6. Replace the meter cap, making sure the meter cap and the gear on the rotor meshes correctly with the gear in the meter cap (item 4). Insert the allen screws (item 5) and tighten in the sequence 1, 4, 2, & 3.
7. Inspect the bevel gear (item 13), o-ring (item 10), and output gear (item 7) for wear or damage (replace faulty components if necessary).
8. Replacement of output shaft, bush and seal.

Disassembly of output shaft:

a. Remove the bevel gear.
b. Remove the circlip and push out the output shaft assembly, including washer.
c. Remove the seal.
d. Carefully press out the output shaft bush (if required).

Assembly of output shaft

a. Carefully press the new output shaft bush into place (use Loctite Primer 7471, as per instructions, followed by sealant Loctite 262).
b. Insert a new seal into the groove of the output shaft bush.
c. Replace the output gear and washer and replace the circlip to lock the output gear shaft into place.
d. Replace the bevel gear (item 13) and tighten the grub screw onto flat face of shaft.

9. Place the o-ring (item 10) into the groove in the meter cap (replace the o-ring seal if required).
10. Place the cover plate onto the meter. Replace the cover plate screws and tighten the six cap head screws (item 12) firmly.
11. Place the lower cover plate of the register into position. Replace the four screws (item 15) and tighten.
12. Position the register correctly on top of the lower register cover. Replace the four screws (item 17) and tighten.
13. Test the meter by turning the rotors with a finger or by applying low air pressure (no more than a good breath) to one end of the meter, before returning meter to the line.

6.5 Meter parts listing

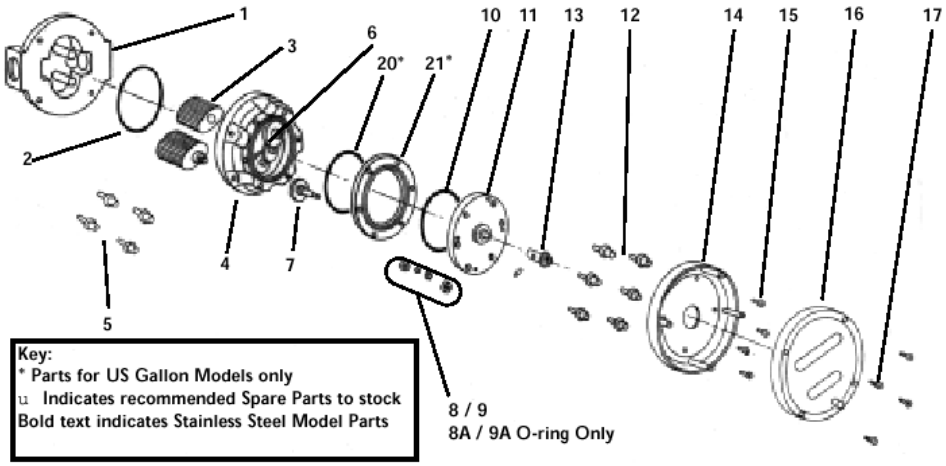

Item No.	No. Off.	Rec. Parts	Part or set (order from this column only)	Part description
1	1		MS298B	Meter body ½" BSP (aluminium)
1	1		MS298N	Meter body ½" NPT (aluminium)
1	**1**		**MS337B**	**Meter body ½" BSP (stainless steel)**
1	**1**		**MS337N**	**Meter body ½" NPT (stainless steel)**
2	1	u	BS145S	O-ring (NBR)
2	1	u	BS145ES	O-ring (EPDM)
2	1	u	BS145TES	O-ring (Teflon)
2	1	u	BS145VS	O-ring (Viton)
3	2	u	MS342MS	Rotors PPS (Polyphenylene Sulfide Resins)
3	2	u	MS342MTS	High temperature rotors (PPS)
3	2	u	MS342MHS	High viscosity rotors (PPS)
3	2	u	MS342MHTS	High viscosity/high temperature rotors (PPS)
4	1		MS544S	Meter cap liters (Aluminium)
4	1		MS547S	Meter cap US gallons (aluminium)
4	**1**		**MS545S**	**Meter cap liters (stainless steel)**
4	**1**		**MS546S**	**Meter cap US Gallons (stainless steel)**
5	4	u	MS346S	Meter cap screws (standard)
5	4	u	MS350S	Meter cap screws (stainless steel)
6	**1**	**u**	**MS539S**	**Complete gear set – liters**
6	1	u	MS541S	Complete gear set – US gallons
7	1	u	MS77S	Output gear & shaft assembly
8	1	u	MS78S	Cover plate seal/bush set standard
8A	1	u	OR42CS	Solvent O-ring (Perfluor Elastomer)
9	1	u	MS78C	Cover plate seal/bush set solvent
9A	1	u	N7-007S	Standard O-ring (NBR)
9A	1	u	E7-007S	O-ring (EPDM)
9A	1	u	V7-007S	O-ring (Viton)
10	1	u	BS145S	O-ring (NBR)
10	1	u	BS145ES	O-ring (EPDM)
10	1	u	BS145TES	O-ring (Teflon)
10	1	u	BS145VS	O-ring (Viton)

11	1		MS99S	Cover plate (aluminium) includes bush
11	**1**		**MS99-1S**	**Cover plate (stainless steel) incl. bush**
12	6	u	MS312S	Cover plate screws – litre model
12	**6**	**u**	**MS313S**	**Cover plate screws (stainless steel) litre model**
12	6	u	MS419S	Cover plate screws – US gallon model
12	**6**	**u**	**MS420S**	**Cover plate screws – (stainless steel) US gallon model**
13	1	u	MS38S	Bevel gear set
14	1		MS140S	Bottom register cover plate
15	4	u	MS111S	Mounting screws
16	1	u	MS141M4S	Register assembly with cover plate – liters
16	1	u	MS141US	Register assembly with cover plate – US gallons
17	4	u	MS129S	Register body screws
20	1	u	BS145S	O-ring (NBR)
20	1	u	BS145ES	O-ring (EPDM) US gallon
20	1	u	BS145TES	O-ring (Teflon) model only
20	1	u	BS145VS	O-ring (Viton)
21	1	u	MS423S	Spacer ring (Aluminium) US gallon model only
21	**1**	**u**	**MS423-1S**	**Spacer ring (stainless steel) US gallon model only**

6.6 Dimensions

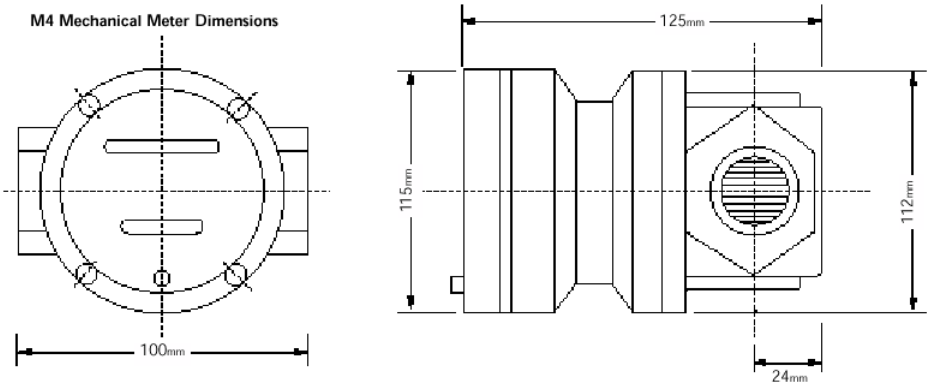

6.7 Specifications

Flow ranges	(Litres per min /US gallons per min)
Above 5 mPas	1 to 30/ 0.26 to 8
Below 5 mPas	3 to 25/ 0.8 to 6.6
Accuracy of reading	+/- 1%
Maximum viscosity	1000 mPas
Maximum operating pressure	3450 kPa / 500 PSI / 34.5 bar
Maximum operating temperature	80°C / 176°F

6.8 Troubleshooting

Trouble shooting guide		
Trouble	Cause	Remedy
Fluid will not flow through the meter	A) Foreign matter blocking rotors B) Line strainer blocked C) Damaged rotors D) Meter connections overtightened E) Fluid is too viscous	A) Dismantle meter, clean rotors (strainer must be fitted in line). B) Clean strainer C) Replace rotors (strainer must be fitted in line) D) Re-adjust connections E) See specifications for maximum viscosity
Reduced flow through the meter	A) Line strainer partially blocked B) Fluid is too viscous	A) Clean strainer B) See specifications for maximum viscosity
Meter reading inaccurate	A) Fluid flow rate is too high or too low B) Fluid is too viscous C) Excess wear caused by incorrect installation	A) See "specifications" for minimum and maximum flow rates B) Bleed air from system C) Check meter body and rotors. Replace as required. Refer to installation instructions.
Fluid flows but no reading on meter	A) Bevel gear is loose on shaft B) Rotor drive gear is damaged C) Transmission gear is damaged D) Register gear is damaged	A) Tighten grub screws B) Replace rotor C) Replace gears D) Replace register assembly
Fluid leaks into register	A) Seal worn or damaged on the cover plate	A) Replace seal (check seal compatibility with fluid)

7. Modell MN4 with pulse transmitter / standard LCD / deluxe LCD

7.1 General information

The MN4 series flow meters are available in either aluminium or 316 stainless steel. Standard rotors are made from PPS (Polyphenylene Sulfide Resins) with optional 316 stainless steel rotors available for both stainless steel and aluminium models.

The MN4 series is available with either;
* Standard pulse
* Standard LC display and pulse
* Deluxe LC display and pulse

7.2 Installation

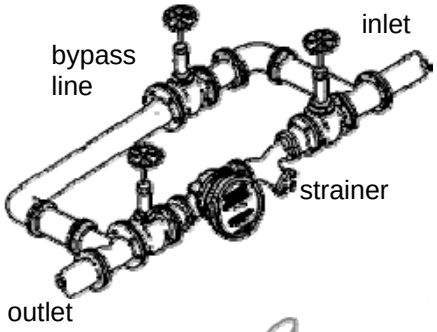

1. We recommend that when setting up pipework for meter installations a bypass line be included in the design. This provides the facility for a meter to be removed for maintenance without interrupting production (see fig.1).
2. Use thread sealant on all pipe threads.
3. For pump applications ensure pipe work has the appropriate working pressure rating to match the pressure output of the pump.
4. Install a wire mesh strainer (Y or basket type 60 mesh) as close as possible to the inlet side of the meter.
5. Ensure that the meter is installed so that the flow of the liquid is in the direction of the arrows embossed on the meter body.
6. The meter can be installed in any orientation as long as the meter shafts are in a horizontal plane (refer to Fig.2 for correct installation). The register assembly may be orientated to suit the individual installation.

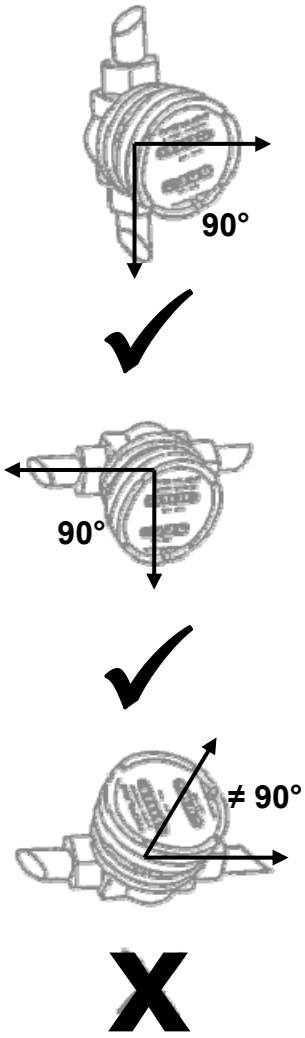

<u>Note:</u> Incorrect installation can cause premature wear of meter components.

7. Do not overtighten meter connections.
8. It is important that after initial installation you **fill** the **line slowly**, high speed **air purge** could cause **damage** to the **rotors**.
9. Test the system for leaks.
10. Check the strainer for swarf or foreign material, after the first 200 litres check periodically, particularly if the flow rate decreases.

7.3 Operation

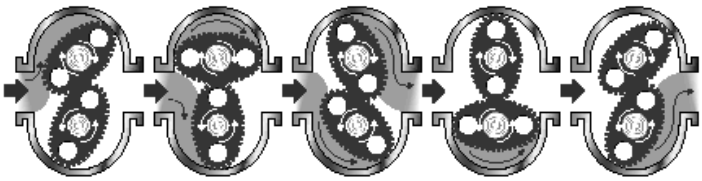

When fluid passes through the meter, rotors turn. The magnets which are located in the rotors will pass across the pulser circuit board (containing either reed switches or hall effect sensors). A signal is received which is then sent by the pulse circuit board (PCB) to the relevant LC display or receiving instrument.

7.4 Electrical connections (1/2“ to 4“)

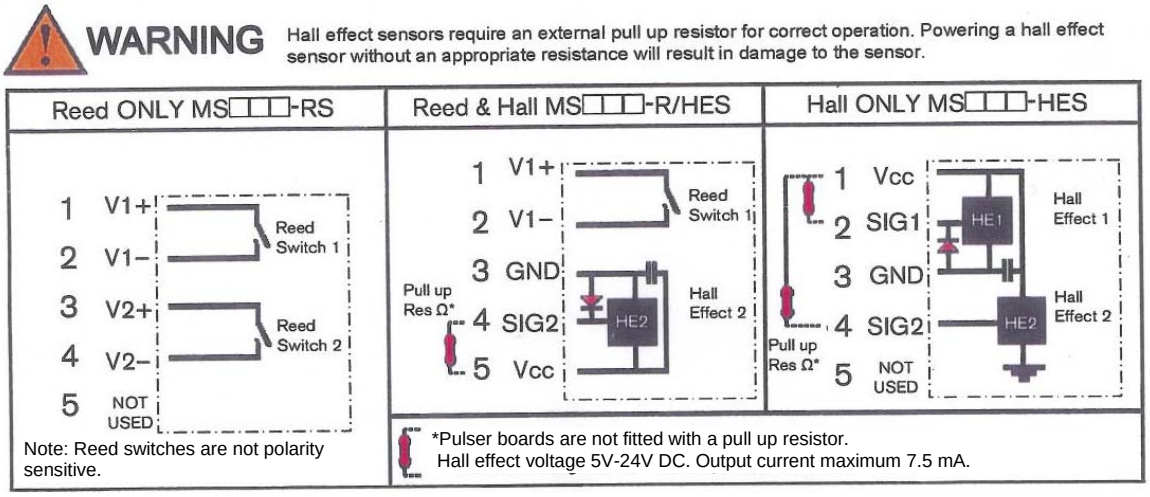

7.5 Service instructions

Disassembly:

Ensure that the fluid supply to the meter is disconnected and the line pressure is released before disassembly, with the exception for repair or maintenance to the LC display or PCB where there is no necessity to isolate the meter from flow. Refer to the exploded parts diagram for item numbers.

1a. Units with pulse caps: Undo the conduit connector, remove pulse cap (item 9) and remove the wires from the pulse terminal board (item 5).

1b. Standard LC display: Mark the display orientation with a marking pen, unscrew the four large screws (item 30) on top of the LC display. Carefully separate the LC display from the plastic housing and disconnect the wires from the pulse terminal block (see standard LC display instructions).

1c. Deluxe LC display; Mark the display orientation with a marking pen, remove the four retaining screws on the display face (item 16). Lift off the display unit and remove the 9 pin connector at the back of the display unit (refer to separate deluxe LC display instruction manual).

2. Remove the mounting adaptor plate and gasket (item 14).
3. Loosen the six cap head screws (item 7) that hold down the meter cap (item 4), remove the screws, washers and lift off the cap.
4. Remove the o-ring (item 2) from the o-ring groove in the meter cap (item 4).
5. Remove rotors (item 3).

Reassembly:

1. Before reassembling check the condition of the rotors (replace if necessary).
2. Check that the smooth side of the rotors (not the plug side) is facing you when inserting the rotors, the smooth side of the rotor is the magnet side. There is no difference between rotor one or rotor two.
3. Replace the rotors (item 3) onto the shafts at 90° to each other (refer fig. 5) and check their operation by turning either of the rotors. If the rotors are not in mesh correctly or do not move freely, remove one of the rotors and replace correctly at 90° to the other rotor. Re-check the operation of the rotors.

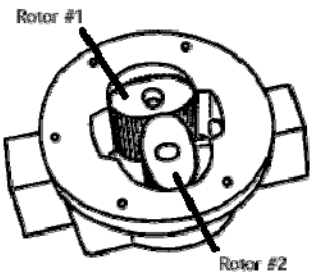

Rotors must be at 90° to each other.

4. Replace the o-ring (item 2) into groove in the meter cap, if the o-ring has grown or is damaged in any way replace it with a new part.
5. Replace the meter cap making sure that the locating pin in the body lines up with the hole in the meter cap. Insert the cap head screws (item 7) and tighten in the sequence 1, 4, 2, 5, 3, 6.
6. The replacement of cables and connectors are a reversal of the disassembly procedure, replace conduit fitting if required. When replacing the standard LC display or the deluxe LC display, confirm the orientation marks made on disassembly are aligned then screw the register into place.
7. Test the meter by turning the rotors with a finger or by applying very low air pressure (no more than a good breath) to one end of the meter, before returning the meter to the line.

Pulse circuit board (PCB) notes:
The PCB (item 5) is fitted with (A) two reed switches, (B) hall effect sensors or (C) one reed switch and one hall effect sensor. The PCB board is fastened to the meter cap (item 4) by two screws and stand off's. All care and caution should be taken when removing or handling the PCB as both the reed switch and hall effect sensor are fragile. Individual reed switches or hall effect sensors are not available as individual replacement parts and are only available with the PCB (item 5).

7.6 Standard LC Display

This section of the instruction manual assists you in the operating of the standard LC display. Please take a few minutes to acquaint yourself with the following information.

Replace battery

1. Remove the two large screws (item 30) and the two small screws (item 31) from the battery cover plate (item 29).
2. Remove the battery cover plate (item 29) and gasket (item 28).
3. Remove battery and clean any corrosions from the battery terminals (to protect terminals from corrosion or condensation coat the terminals with petroleum jelly).
4. Install the new battery.
5. Check gasket (item 28) for damage (replace if required). Position gasket (item 28) and cover plate (item 29) correctly, insert the screws and tighten.

Display operation
All meter operations are reflected in the readout on the face of the meter. The readout contains three lines of information; refer to figure below.

Note: The calibration is preset and is permanently stored in the meter's computer.

The meter will turn on automatically when the liquid flows through the meter. The meter can also be turned on manually by pressing and releasing the display button.

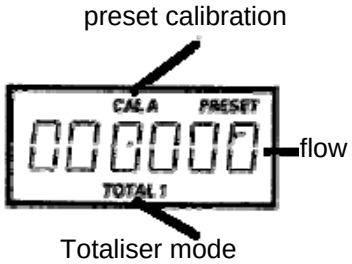

Turn off
The meter turns off automatically two minutes after flow stops. When the meter is off, the readout is blank.

Batch total
The resettable batch total indicates flow during a single use. This total can be reset by holding down the display button for three seconds until zeros appear. The batch total can be found by pressing and releasing the display button until the bottom line displays "Total 2".

Cumulative total
The cumulative total is the total of all the liquid measured since the meter's power supply was connected. This total cannot be manually zeroed, but will zero when the battery has been removed, goes dead, or when it reaches the maximum value of 999,999.
The cumulative total can be found by pressing and releasing the display button until the bottom line displays "Total 1 Locked".

Flow rate
The flow rate is the rate the fluid is flowing through the meter. The flow rate setting can be found by pressing and releasing the display button until the bottom line displays “flow rate”.

Propeller
Any time liquid flows through the meter, a small propeller displays.

Battery replacement
Your meter is powered by a 9 volt lithium battery (replacement batteries; Lithium U9VL, Alkaline 522 or MN1604). If the meter’s readout should become dim or blank, the battery should be replaced. When the battery either falls or is disconnected the batch and cumulative totals return to zero. The factory calibration is retained in the meter’s computer permanently and will not be affected by battery failure.

Auxiliary facilities
Connection of an external 12 volt DC power supply facility:
1] Remove the 4 large screws (item 30) and remove the register from the cover plate.
2] Disconnect the internal battery.
3] Solder the external power leads to the terminals marked ‘Ext 12V’ on the registers printed circuit board.
4] Re-assemble the register onto the cover plate, replace the 4 screws (item 30) and screw firmly together.

Connection of external pulse output
1] Remove the 4 large screws (item 30) and remove the register cover plate.
2] Connect external signal lead (refer fig. 8).

Pulse O/P and Ext power are the connections located on the interface PCB, to utilise this output a 1K resistor will need to be soldered between the + voltage of the external power input and the + of the pulse O/P.

The connections are located on the rear side of the LCD-board.
Pulse O/P PCB Connection = pulse input (Signal from pcb)
Ext Power PCB = connections for external power supply
Pulse Signal to Instrument = pulse output

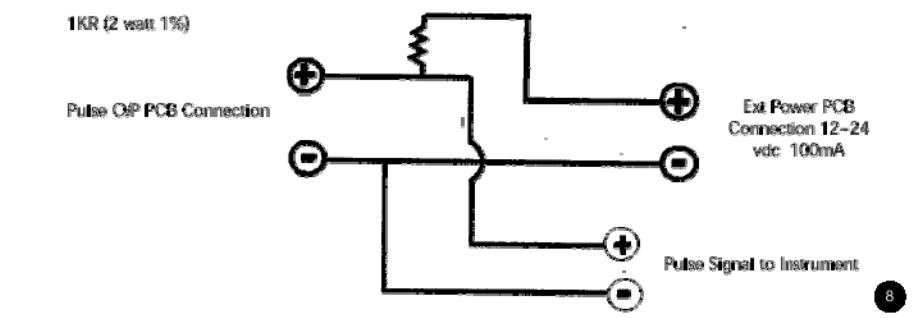

Note: Internal 9 volt battery must be disconnected when using the display pulse output.

7.7 Deluxe LC Display

For details concerning the deluxe LCD, please see the separate deluxe LCD manual.

7.8 Specifications

Meter type / Flow ranges	Pulse	Pulse with standard LC display	Pulse with Deluxe LC display
	(Litres per minute / US gallons per minute)		
Above 5 mPas	1 to 30 / 0.26 to 8	1 to 30 / 0.26 to 8	1 to 30 / 0.26 to 8
Below 5 mPas	3 to 25 / 0.8 to 6.60	3 to 25 / 0.8 to 6.60	3 to 25 / 0.8 to 6.60
Accuracy of reading	+/- 0.5%	+/- 0.5%	+/- 0.5%
Maximum viscosity*	1000 mPas	1000 mPas	1000 mPas
Maximum operating pressure	5500 kPa / 800 PSI / 55 bar	5500 kPa / 800 PSI / 55 bar	5500 kPa / 800 PSI / 55 bar
Maximum operating temperature	80°C / 176°F (stainless steel models 120°C / 248°F)	80°C / 176°F (stainless steel models 120°C / 248°F)	80°C / 176°F (stainless steel models 120°C / 248°F)
Pulse type	Dual reed switches or hall effect sensor or combination HE sensor/reed switch	Dual reed switches or hall effect sensor or combination HE sensor/reed switch	Dual reed switches or hall effect sensor or combination HE sensor/reed switch
Pulses per litre/US gallon	112 / 224 or 424 / 828	112 / 424	112 / 424

*Unless high viscosity or high temperature rotors are fitted

7.9 Meter parts listing

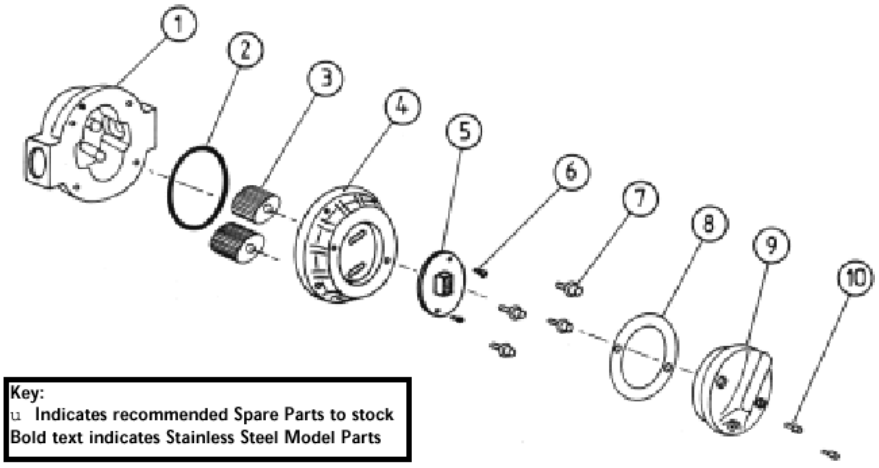

Item No.	No. Off.	Rec. Parts	Part or set (order from this column only)	Part description
1	1		MS298B	Meter body ½" BSP (aluminium)
1	1		MS298N	Meter body ½" NPT (aluminium)
1	**1**		**MS337B**	**Meter body ½" BSP (stainless steel)**
1	**1**		**MS337N**	**Meter body ½" NPT (stainless steel)**
2	1	u	BS145S	O-ring (NBR)
2	1	u	BS145Es	O-ring (EPDM)
2	1	u	BS145TES	O-ring (Teflon)
2	1	u	BS145VS	O-ring (Viton)
3	2	u	MS342S	Rotors PPS (Polyphenylene Sulfide Resins)
3	**2**	**u**	**MS342-1S**	**Rotors (stainless steel)**
3	2	u	MS342TS	High temperature rotors (PPS)
3	2	u	MS342HS	High viscosity rotors (PPS)
3	2	u	MS342HTS	High viscosity/high temperature rotors (PPS)
3	**2**	**u**	**MS342-1HS**	**High viscosity rotors (stainless steel)**
4	1		MS297	Meter cap (aluminium)
4	**1**		**MS338**	**Meter cap (stainless steel)**
5	1	u	MS344-RS	PCB (standard reed switch)
5	1	u	MS344-HES	PCB (hall effect sensor)
5	1		MS344-R/HES	PCB (1 reed switch & 1 hall effect sensor)
6	2		MS284S	PCB board screws
7	4	u	MS346S	Meter cap screws (standard)
7	**4**	**u**	**MS350S**	**Meter cap screws (stainless steel)**
8	1	u	MS340S	Pulser cap gasket
9	1		MS296	Pulse cap (aluminium) 16mm conduit thread
9	1		MS296N	Pulser cap (aluminium) ½" NPT thread
9	**1**		**MS339**	**Pulser cap (stainless steel) 16mm conduit thread**
9	**1**		**MS339N**	**Pulser cap (stainless steel) ½" NPT thread**
10	2		MS347S	Pulser cap screw (stainless steel)
11	1		MS37	Warning label (not shown)
12	1		MS14	Explosion proof approval label (not shown)
13	1			Legend plate (not shown) inc. hammer screws

7.10 Display parts listing

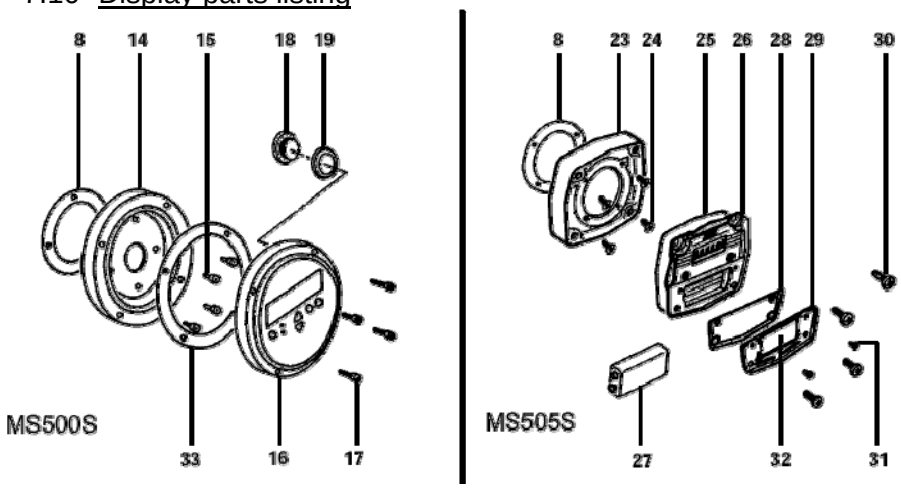

Item No.	No. Off.	Rec. Parts	Part or set (order from this column only)	Part description
			MS500S	**Deluxe LCD display (complete)**
14	1		MS349	Mounting adapter plate
15	4	u	MS117S	Adapter screws
16	1	u	MS69	LC display unit
17	4	u	MS118S	LC display mounting screws
18	1	u	MS127	Battery retaining screw
19	1	u	MS126	Battery (standard) CR2040
20	1	u	MS68	Connector and cable (not shown)
21	1		MS87	PTB approval label (not shown)
22	1	u	MS128	Extended life battery 2/3 AA (not shown) **Note: Not suitable for intrinsic use**
33	**1**	u	**MS307**	**Gasket**
			MS505S	**Standard LC display (complete)**
23	1		MS358	Mounting adapter plate
24	4	u	MS203S	Adapter screws
25	1	u	BS045	O-ring
26	1	u	MS205	LC display
27	1	u	MS274	9 volt battery
28	1	u	MS184S (inc. MS184B)	Battery gasket
29	1	u	MS184S (inc. MS184A)	Battery cover
30	4	u	MS206S	Register screws
31	4	u	Ms182S	Battery cover plate screws
32	1		Customer to specify	Battery cover label

7.11 Dimensions

M4 Pulse Meter Dimensions

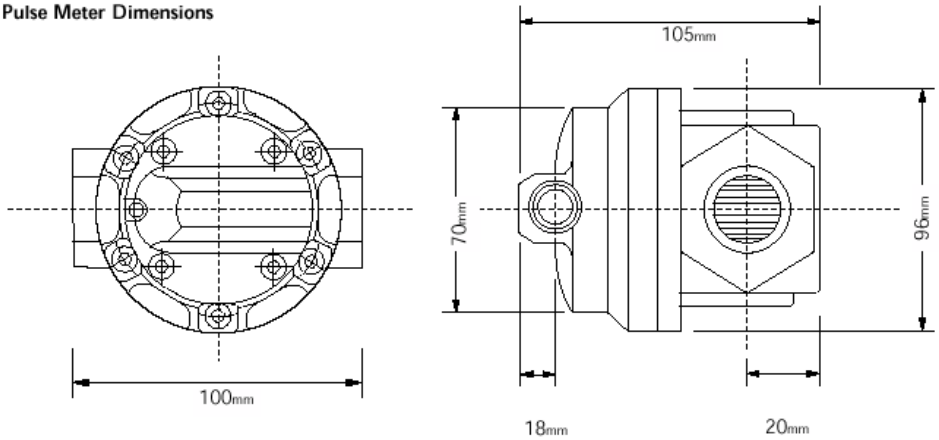

M4 Pulse Meter with Deluxe LC Display

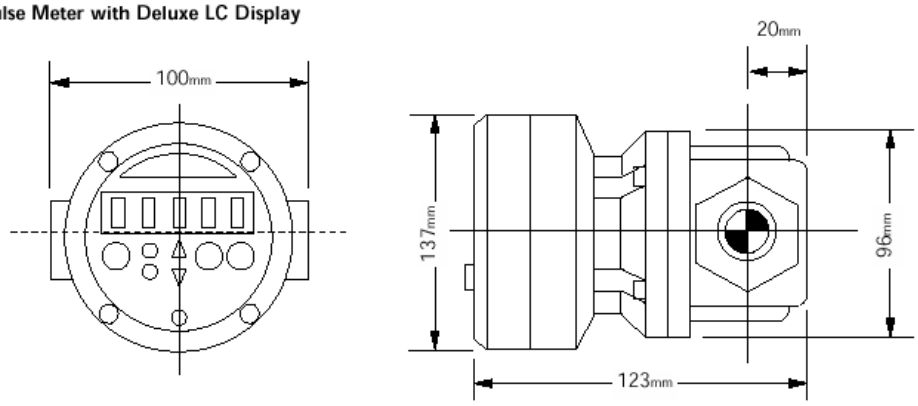

M4 Pulse Meter with Standard LC Display

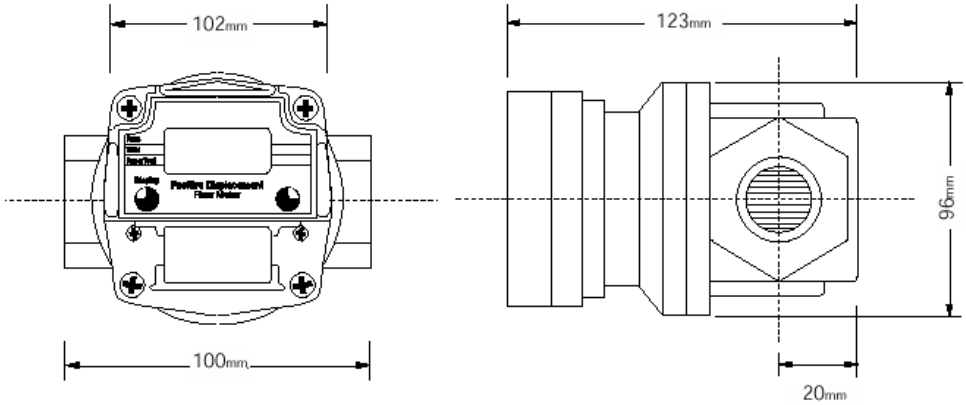

7.12 Troubleshooting

Trouble shooting guide		
Trouble	Cause	Remedy
Fluid will not flow through the meter	A) Foreign matter blocking rotors B) Line strainer blocked C) Damaged rotors D) Meter connections over-tightened E) Fluid is too viscous	A) Dismantle meter, clean rotors (strainer must be fitted in line). B) Clean strainer C) Replace rotors (strainer must be fitted in line) D) Re-adjust connections E) See specifications for maximum viscosity
Reduced flow through the meter	A) Line strainer partially blocked B) Fluid is too viscous	A) Clean strainer B) See specifications for maximum viscosity
Meter reading inaccurate	A) Fluid flow rate is too high or too low B) Fluid is too viscous C) Excess wear caused by incorrect installation	A) See "specifications" for minimum and maximum flow rates B) Bleed air from system C) Check meter body and rotors. Replace as required. Refer to installation instructions.
Meter not giving a pulse signal	A) Faulty hall effect sensor B) Faulty reed switch C) Magnets failed	A) Replace PCB board B) Replace PCB board C) Replace magnets
LCD register not working	A) Battery not connected properly B) Battery flat C) Faulty wiring connections D) Faulty LC display E) Faulty connection from LC display to pulse PCB	A) Check battery connections B) Replace battery C) Check wiring for loose or faulty connections D) Replace LC display E) Check wiring connections

8. Analog register for models with and without encoder

8.1 Service instructions

Removal of register assembly:
Ensure that the fluid supply to the meter is disconnected and the line pressure is released before disassembly. Refer to the exploded parts diagram figure 1 and 2, respectively for item numbers.

1. Remove the four screws (item 27) located under the register housing.
2. Remove the register assembly from the meter.
3. Check the gasket (item 24) for damage, replace if necessary.

Reassembly

1. Clean all components before reassembly.
2. Install the gasket (item 24)
3. Align the drive dog on the register assembly with the mating dog on the meter body/cap assembly.
4. Position the register assembly, in the preferred orientation, then fit and tighten the 4 screws (item 27).
5. Test the register by turning the rotors with a finger or by applying low air pressure (no more than a good breath) to one end of the meter, before re-installing meter to the line.

Dismantling register assembly WITHOUT rotary encoder:
Refer to figure 1 unless otherwise stated

1. Undo the four screws (item 1) and remove the clamp ring (item 2)
2. Remove the glass cover (item 4) and inspect the seal (item 3) for damage, replace if necessary.
3. Carefully remove the plastic pointer (item 5) so as not to damage the stem which is a push fit onto the needle shaft (item 11, refer figure 2).
4. Undo the register face screws (item 6) and remove the register face.
5. Undo the screws (item 8) and remove register mechanism tilting slightly so as to clear the reset arm (item 18) and shaft collar (item 20).
6. To remove the reset arm, undo grub screw (item 23) and remove the reset knob (item 21). Slide the reset arm from the housing being careful not to loose or damage the o-ring (item 22). Inspect o-ring for damage, replace o-ring if necessary.
7. Assembly is the reverse of the above procedure.

Dismantling register assembly WITH rotary encoder:
Refer to figure 1 unless otherwise stated.

1. Follow steps 1, 2 ,3 and 4 as above.
2. Undo grub screw (item 14) to enable the shaft coupling (item 12) to be withdrawn from encoder shaft (refer item 16, figure 2).
3. Undo two socket head cap screws (item 9) and slide encoder housing away from register housing. If it is necessary to remove the encoder coupling (item 12) from the encoder, record the distance the coupling is from the face of the encoder so it can be replaced in the same position. This is important to prevent overloading of the encoder bevel drive gears.
4. Follow steps 5 and 6 above to complete disassembly.
5. Assembly is the reverse of the above procedure.

Dismantle counter wheel assembly:
Refer to figure 2 unless otherwise stated

1. Dismantle the register assembly as previously detailed.
2. Undo the 4 screws (item 1) and remove the counter wheel assembly (item 3).
3. Undo the two countersunk screws (item 17) and remove the encoder shaft (item 16) complete with bearing block (Item 15), bevel gear (item 18) and spur gear (item 13). Do not attempt to remove this gear from the shaft.
4. Further disassembly is done by removing the remaining grub screws (item 19 and 21), and withdrawing the shafts (items 6 & 11).
5. Assembly is the reverse of the above procedure.

Refer to the standard mechanical register instruction sheet for further advise on gearbox, output shaft and seal related maintenance issues.

8.2 Register parts listing

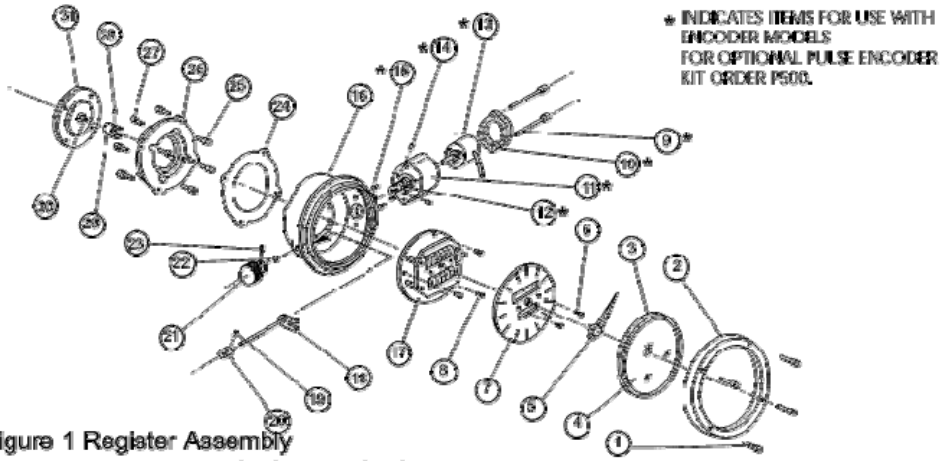

Figure 1 Register Assembly
Complete assembly order MS435s (Litre) MS435Us (USG)

Item No.	No. Off.	Rec. Parts	Part or set (order from this column only)		Part description
1	4	MS444			Clamp ring screws
2	1	MS443	MS443s		Clamp ring
3	1	MS446			Seal
4	1	MS445	MS445s		Glass face
5	1	MS448	MS448s		Pointer
6	2	MS439			Screw
7	1	MS447	MS447s		Fascia litres
7	1	MS447U	MS447Us includes item 6		Fascia US gallons
8	3	MS464	MS464s		Screw
9*	2	MS442	MS442s		Cap screw (encoder model only)
9	2	MS115	MS492s		Cap screw (without encoder)
10*	1	MS441	MS441s includes 2 x item 9*		Cover (encoder model only)
10	1	MS441-B	MS441-Bs incl 2 x item 9 + BS120		Cover (without encoder, also requires 1 x BS120 o-ring)
11*	1	MS440	MS440s includes item 9* + 10*		Encoder housing (encoder model only)
12*	1	MS494			Encoder coupling (encoder model only)
13*	1	MS407			Encoder (100 pulse per rev) (encoder model only)
14*	4	MS151			Grub screw (encoder model only)
15*	3	MS437	MS407s		Screw (encoder model only)
16	1	MS435	MS435Hs		Register housing
17	1	MS143	MS143s includes item 8		Reset mechanism assembly (refer figure 2)
18	1	MS463L			Reset arm
19	1	MS146			Grub screw
20	1	MS450	MS463Ls		Shaft collar
21	1	MS451			Reset knob
22	1	BS008			O-ring (Nitrile)
23	1	MS146	MS451s		Grub screw
24	1	MS107	MS107s		Gasket
25	4	MS514			Bolt
26	1	MS326			Register adapter
27	4	MS465	MS326s		Bolt
28	1	MS146			Grub screw
29	1	MS246			Drive dog
30	1	MS309	MS246s		Output shaft (long)
31	1	MS327	MS327s	Refer to mech. meter instruction sheet	Cover plate (aluminium)
31	1	MS327-1	MS327-1s		Cover plate (stainless steel)

8.3 Counter parts listing

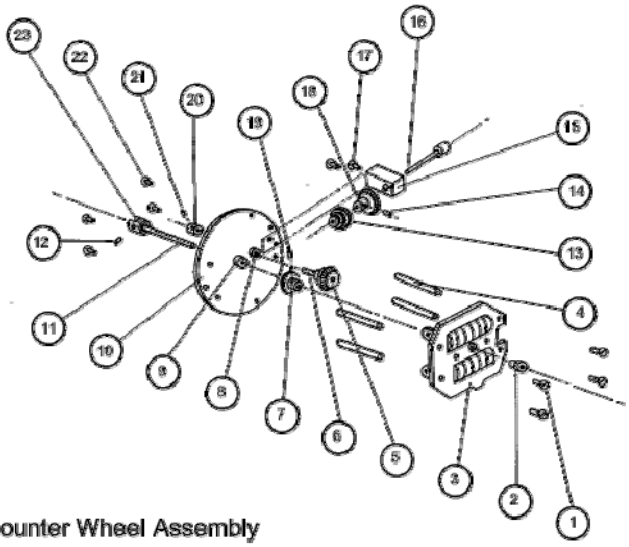

Figure 2 - Counter Wheel Assembly
Complete assembly order MS143s

Item No.	No. Off.	Rec. Parts	Part or set (order from this column only)	Part description
1	4	MS438		Screw
2	1	MS454		Bush – needle shaft (top)
3	1	MS142		Register display mechanism
4	4	MS453	Note: Only available as a complete register assembly, order MS143s	Spacer
5	1	MS462		Bevel compound gear
6	1	MS308		Output shaft (short)
7	1	Ms460		Gear
8	1	MS458		Bush – idler shaft
9	1	MS457		Bush – needle shaft (bottom)
10	1	MS436		Register chassis
11	1	MS452		Needle shaft
12	1	MS146		Grub screw
13	1	MS240		Spur gear
14	1	MS146		Grub screw
15	1	MS455		Encoder shaft housing
16	1	MS456		Encoder shaft
17	2	MS437		Cap screw
18	1	MS461		Bevel gear
19	1	MS146		Grub screw
20	1	MS459		Idler shaft gear
21	1	MS146		Grub screw
22	4	MS437		Cap screw
23	1	MS409		Drive dog

8.4 Encoder wiring

The encoder (item 13, refer figure 1) is an optical incremental shaft encoder. It has a 1000 pulses per revolution resolution output. The output is an open collector with 3 phases (A, B and Z) that can function on a 5 to 12 Volts DC power supply.

Please read this information carefully before use!

Optical encoders are delicate instruments and should be treated with care. Shock loads and incorrect electrical connection will lead to encoder damage.

To avoid electrical interference, use quality shielded cable to connect the encoder to the recording instrument, ensure the cable shield is grounded, as shown in wiring diagram below. The maximum allowable transfer distance for open collector encoders is 50 metres.

To avoid damage to the encoder, please observe the manufactures electrical specifications, wiring table & wiring diagram shown in below.

Electrical Specifications:

Resolution	1000 pulse per rev.
Power supply	DC5V –5% ~DC12V +5%
Current consumption	50mA maximum
Output from (open collector)	
Maximum allowable output voltage	40V
Maximum sink current	30 mA
Maximum response frequency	200 kHz
Operating temperature range	-10°C - +70°C
Encoder protection	IP 50
Maximum signal transfer distance	50 metres

Wiring colours table:

Lead colour	Function
Red	DC + 5 ~ 12V
Black	GND
Yellow	Z channel output
White	GND
Blue	A channel output
Green	B channel output
Brown	--
Orange	--

Wiring diagram :

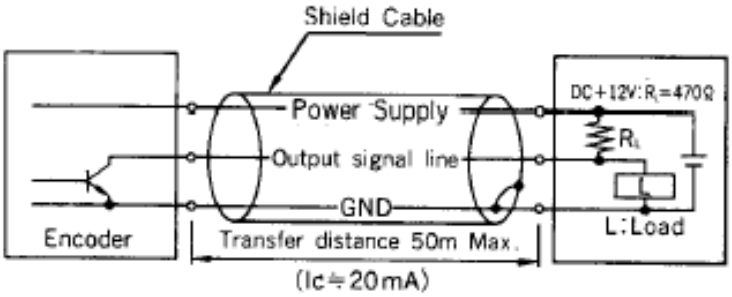

Phasenverschiebung Ausgang:

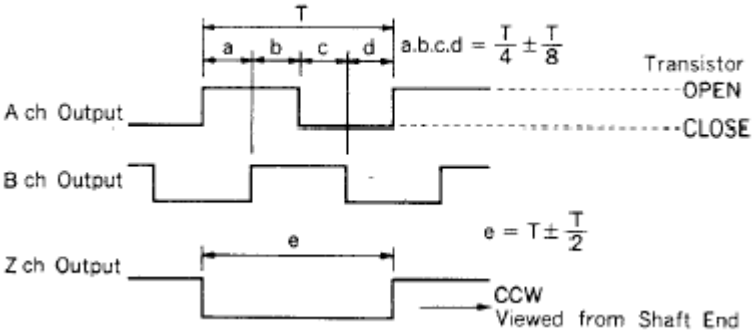

<u>Note:</u> The above voltage waveform can be obtained by loading the output with a resistor (R_L) as shown in the figure above.

9. Warranty

Badger Meter warrants meters and parts manufactured and supplied by it hereunder to be free from defects in materials and workmanship for a period of 18 months from date of shipment or 12 months from date of installation, whichever period shall be shorter. If within such period any meters or parts shall be proved to seller´s satisfaction to be defective, such meters or parts shall be repaired or replaced at seller´s option. seller´s obligation hereunder shall be limited to such repair and replacement and shall be conditioned upon seller´s receiving written notice of any alleged defect within 10 days after its discovery and, at seller´s option, return of such meters or parts to seller, f.o.b. its factory. THE FOREGOING WARRANTY IS EXCLUSIVE AND IN LIEU OF ALL OTHER EXPRESS OR IMPLIED WARRANTIES WHATSOEVER INCLUDING BUT NOT LIMITED TO IMPLIED WARRANTIES (EXCEPT OF TITLE) OF MERCHANTABILITY AND FITNESS FOR A PARTICULAR PURPOSE. Badger Meter shall not be liable for any defects attributable to acts or omissions of others after shipment, nor any consequential, incidental or contingent damage whatsoever.

Note:

This warranty does not form part of, nor does it constitute, a contract between Badger Meter and the end user. It is additional to any warranty given by the seller of the products and does not exclude, limit, restrict or modify the rights and remedies conferred upon the end user, or the liabilities imposed on the seller, by any statute or other laws in respect of the sale of the product.

10. Return of goods for repair / harmlessness declaration

Please copy, fill in and sign hereafter harmlessness declaration and enclose it for any return of goods you may send back for repair.

No repair will be performed prior to receiving the harmlessness declaration duly filled and signed.

Harmlessness declaration

To : _____

Attn. : _____

From : _____

Dept. : _____

Please note that no repair will be performed prior to receiving of this declaration duly signed by you!

Please send all parts clean from medium and inform us about possible medium wastes remaining in the part. For this purpose, please use this form. A security specification sheet of the medium must accompany this declaration in the following cases: Toxical, dangerous or objectionable media, or media belonging to any dangerous materials class. We inform you that uncleaned parts lead to additional costs. Extra clean costs will be charged to you. Furthermore, we reserve us the right to send the parts back to you for cleaning!

Declaration

We herewith confirm that the part(s) sent for repair has/have been cleaned and is/are free of any liquid and/or solid wastes of the medium and/or cleaning medium: Any eventually remaining wastes are:

❍ harmless

❍ dangerous, toxic, etc. – Security specifications are attached

Signature of person in charge: _____

Name of the person in charge in capital letters: _____

Date: _____

Company stamp: _____

_____

Hotline

Tel. +49-7025-9208-0
Fax +49-7025-9208-15

®

Badger Meter Europa GmbH
Subsidiary of Badger Meter, Inc.

Nürtinger Strasse 76
72639 Neuffen (Germany)
E-mail: badger@badgermeter.de
www.badgermeter.de